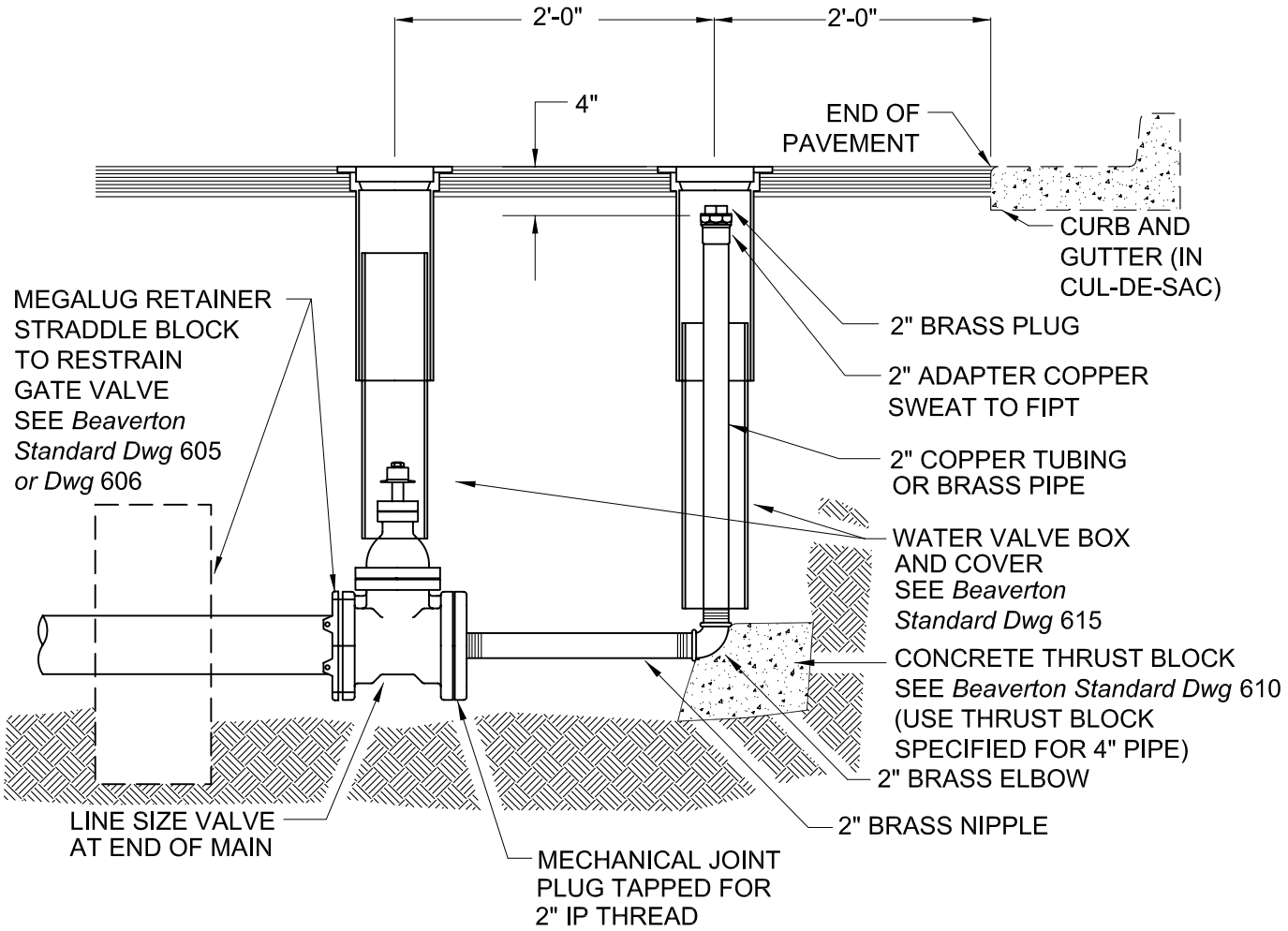

NOTES:

1. This blowoff is to be used at the ends of cul-de-sacs and at the end of water lines that may be extended in the future.
2. Blowoff size must be in accordance with *AWWA* flushing flow rates, but not less than 2-inches for 8-inch lines and smaller with 4-inches being the next approved size. (For blowoffs 4-inches and larger, see *Beaverton Standard Dwg* 631.)
3. Blowoff is not to be located in gutter or ditch.
4. The 2-inch fittings shall be brass.
5. Use copper or brass for all piping.
6. For temporary blowoff installations, see *Beaverton Standard Dwg* 633.

City Of Beaverton

ENGINEERING DEPARTMENT		STANDARD 2" BLOWOFF	
UTILITIES ENGINEER David A. Winship, P.E.	DATE 6 - 10 - 04	DRAWN BY JR - CPD	DRAWING NO. 630