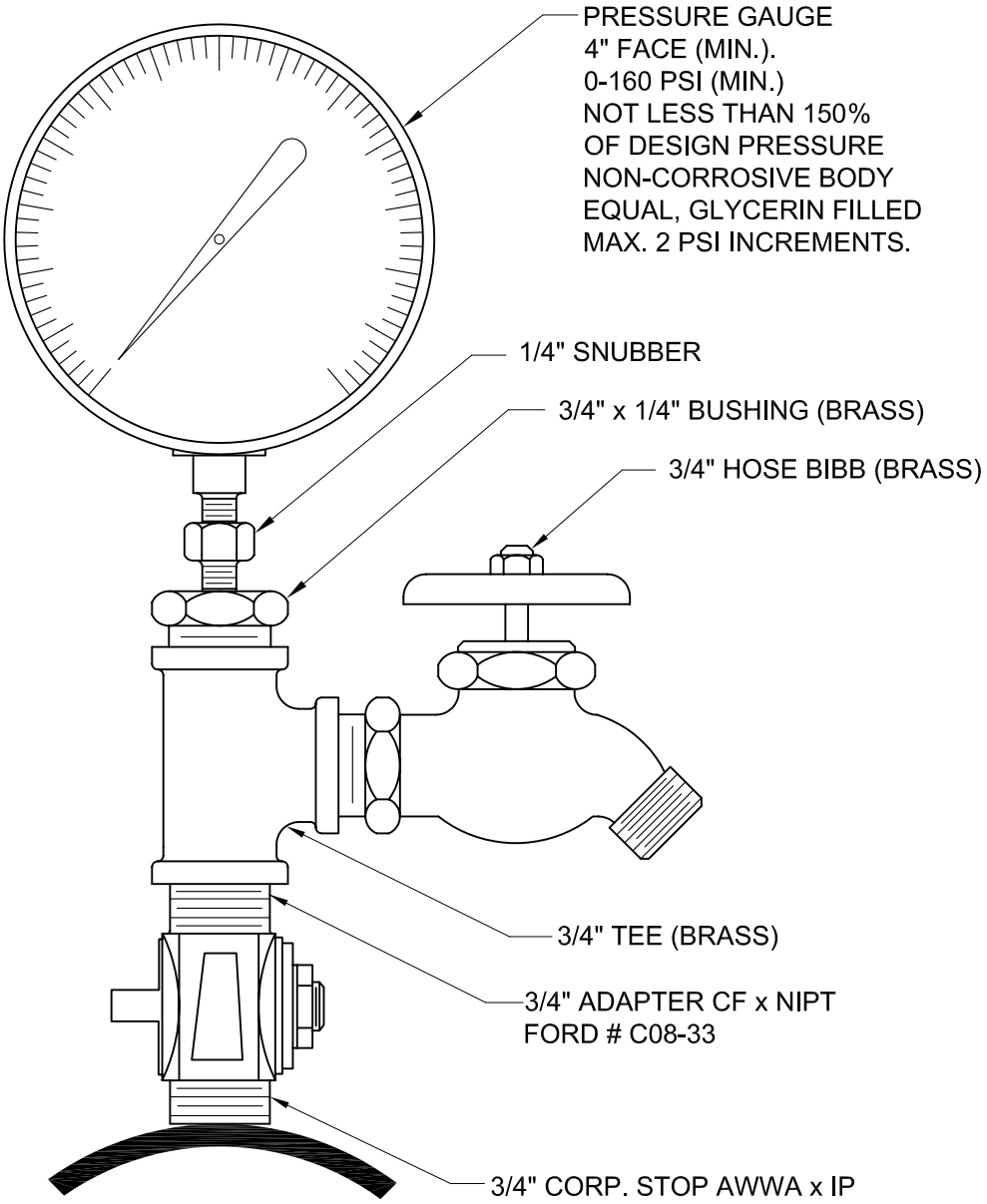

City Of Beaverton

ENGINEERING DEPARTMENT		TYPICAL PRESSURE GAUGE WITH HOSE BIB	
UTILITIES ENGINEER David A. Winship, P.E.	DATE 6 - 10 - 04	DRAWN BY CDH - WD	DRAWING NO. 655